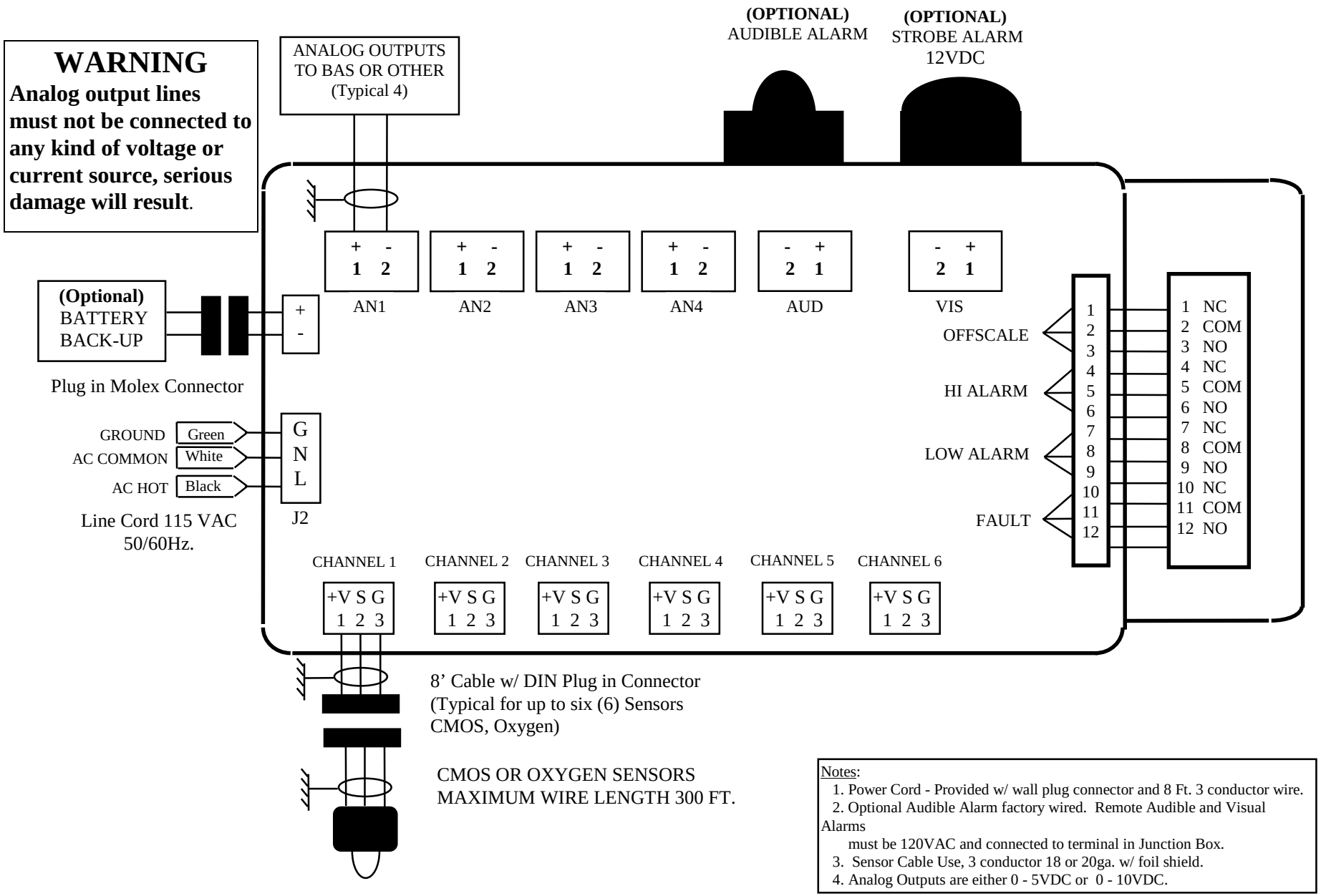

Notes:
1. Power Cord - Provided w/ wall plug connector and 8 Ft. 3 conductor wire.
2. Optional Audible Alarm factory wired. Remote Audible and Visual Alarms must be 120VAC and connected to terminal in Junction Box.
3. Sensor Cable Use, 3 conductor 18 or 20ga. w/ foil shield.
4. Analog Outputs are either 0 - 5VDC or 0 - 10VDC.

Figure 10 - Wiring Diagram